GUY GRAY™ IPS CORPORATION

Metal Dish Washer Outlet Box

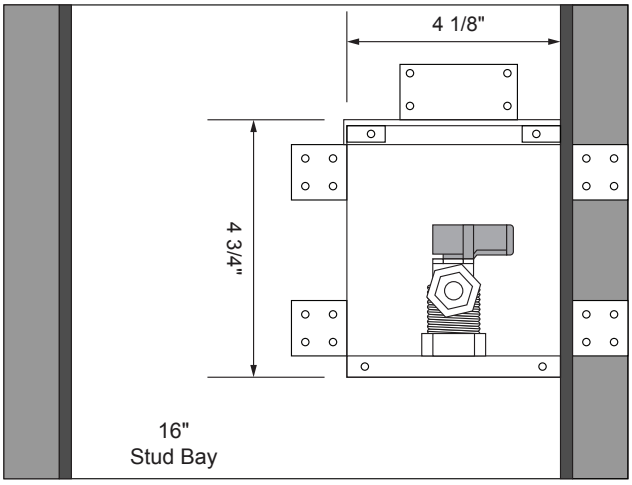

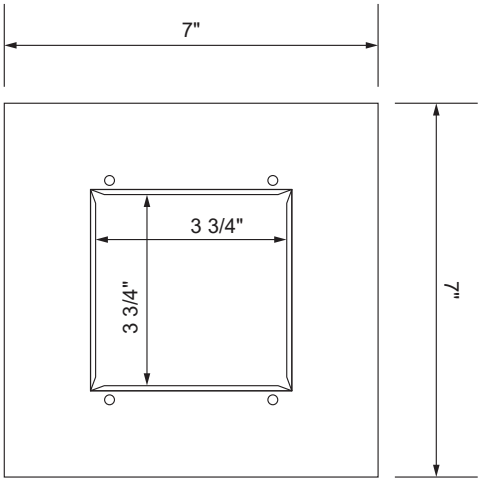

Specifications:
Furnish and install dishwasher outlet box. Unit shall have a lead free quarter-turn ball valve. Unit shall be Guy Gray product code checked below as manufactured by IPS Corporation.

Box Material:
White Powder Coat on Cold Rolled Steel Finish

Valve and Drain Options:
Lead free Qtr. Turn Valve kit with 1/2" MIP/Sweat, CPVC or Pex connection. Kit includes valves, locknuts and o-rings.

	PRODUCT	DESCRIPTION	MODEL	UNITS/ CASE
	87964	3/8" Outlet, Qtr-turn, 1/2" Sweat Conx.	MDWB4AB	5
	87965	3/8" Outlet, Qtr-turn, 1/2" CPVC Conx.	MDWB5AB	5
	87966	3/8" Outlet, Qtr-turn, 1/2" F1807 Conx.	MDWB6AB	5

IPS CORPORATION 500 Distribution Parkway, Collierville, TN 38017 ▪ Phone: 800-888-8312 ▪ Fax: 901-853-5008 ▪ www.ipscorp.com

©2021 IPS Corporation